CBQ

Active multiservice chilled beam

20/CBQ/1109/EN

CBQ active chilled beams represent the latest generation of Halton multiservice beam. With a long-standing and continuing development program Halton have arrived at an optimised product that meets the client, contractor and users expectations of cost, performance and comfort.

Complete with factory-fitted and tested lighting, CBQ-units are supplied to site as a single-fix device, satisfying comfort cooling, heating and lighting needs. Options of the finish and equipment allow the CBQ to be tailored to meet the aesthetic and engineering requirements of the site. Options, which can be factory fitted and tested, include:

- Temperature, occupancy and illuminance sensors
- Smoke detector
- Space for sprinkler pipes and nozzles
- Public address speakers
- Cables and cable tray for power & control wiring
- Primary air and Halton Air Quality (HAQ) control dampers
- Chilled water and LTHW control/isolation valves
- Room controller

Halton provides a complete chilled beam design/selection support service – cooling, heating and lighting plots, including emergency lighting and thermodynamic performance and velocity profiles – arrived at by employing our product selection software.

Lighting solutions developed with our lighting partners are optimized to meet the requirements of the design team for photometry, control, efficiency and aesthethics. Lights can be either optical mirror or prismatic diffuser types or also LED-lights, with DALI 1... 10 volt compatible lighting controls.

The CBQ is ideally suited to those buildings with reduced floor-to-ceiling heights as they allow the full height of the space to be realized between beams (no suspended ceilings). This reduced height requirement can also liberate additional floors on multi-storey new construction buildings.

For longer multiple beam module installations, chilled beams are supplied as a co-ordinated "plug and play" system with primary air plenums being connected together, avoiding the need to run separate ducts to second, third or possibly fourth beams. Luminaires are daisy chained so that only one power/control cable is required for a multiple chilled beam module installation.
The installation space for chilled and LTHW thro-pipes removes the need to install separate feed pipework externally to those secondary+ beam modules.

Halton multiservice chilled beam provides concept with many benefits.

- Reduced installation lead time at site (ready to install units)
- Improved site logistics due to reduced number of items to be stored at site
- One source responsibility lowers the risk
- Excellent quality of installation due to off-site manufacturing
- Creates greater effective room volumes spaces by allowing higher spaces without suspended ceilings.

The motorized Halton Air Quality (HAQ) control is a recent innovation available in both our recessed and exposed active multiservice chilled beams Halton Air Quality (HAQ) control. In essence, this provides a variable air flow capability to the chilled beam helping deliver significant cost savings to the operation of the system when occupancy levels fall or their distribution throughout the building changes.
In-built flexibility for easy and fast adaptation of operation during space layout and usage changes

- Individually adjustable velocity conditions with Halton Velocity Control (HVC)
- In-built flexibility of partition wall relocations with Halton Velocity Control
- Individually adjustable supply air flow rate for layout or space usage changes with Halton Air Quality (HAQ) control
- Demand based control of supply air flow rate. Demand-based operation using airflow control damper in constant pressure ductwork zone applications.
- Additional air flow rate has no effect on cooling/ heating capacities in constant-pressure ductwork.
- Rapid adjustment of operation in situations of change without the need to change or plug nozzles.

In-built flexibility for easy and fast adaptation of the chilled beam operationduring space layout changes (new location of furniture or partition walls are moved) or when usage of space is changed (e.g. cellular office, landscape office, or meeting room)

- Individually adjustable velocity conditions with Halton Velocity Control (HVC)
- Individually adjustable supply airflow rate with Halton Air Quality (HAQ) control
- Manual adjustment of airflow rate can be replaced with motorized demand-based control of supply air flow rate
- Adjustment of airflow rate has no effect on cooling/ heating capacities in constant-pressure ductwork
- Rapid adjustment of operation without the need to change or plug nozzles.

Product Models & Accessories

- Model with combined cooling and heating coil
- Models with different nozzle sizes for different air flow ranges.
- Model with flush mounted T5 luminaires integrated with the chilled beam.
- The luminaires are equipped with high-quality optics suitable for working using computer monitors
- Model with controllable supply air flow rate using motorised control damper
- Model with air flow adjustment damper
- Cable tray, infill, integrated control valves, actuators, sensors and detectors as accessories

DIMENSIONS AND WEIGHT

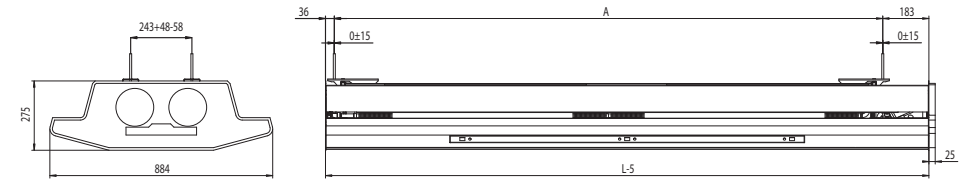

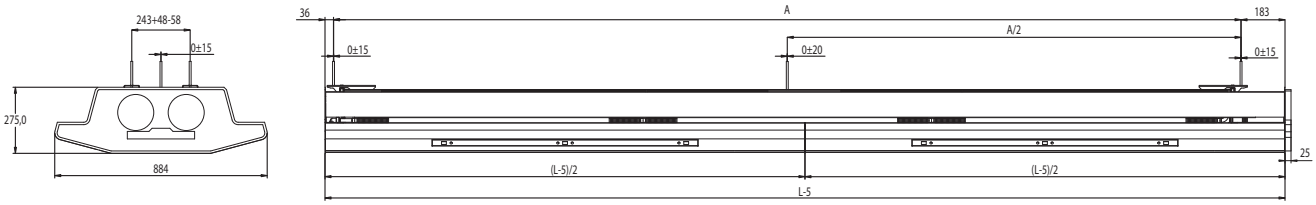

Coil length	800, +100, ..., 3600
L	1200, +100, ..., 4000
A	976, +100, ..., 3776
kg/m	29

Model with two sections

The front panel of the chilled beam is divided into two equal sections in chilled beams longer than 2400 mm.

MATERIAL AND FINISHING

PART	MATERIAL	FINISHING	NOTE
Front panel	Pre-painted galvanised steel	Polyester-painted white RAL 9010 20% gloss	Special colours available Polyester-epoxy-painted
Side panels	Pre-painted galvanised steel	Polyester-painted white RAL 9010 20% gloss	Special colours available Polyester-epoxy-painted
End panels	Pre-painted galvanised steel	Polyester-painted white RAL 9010 20% gloss	Special colours available Polyester-epoxy-painted
Coil covers	Pre-painted galvanised steel	Polyester-painted white RAL 9010 20% gloss	Special colours available Polyester-epoxy-painted
Cable trays	Galvanised steel		
Supply air plenum	Galvanised steel		
Brackets	Galvanised steel		
Coil pipes	Copper		
Coil fins	Galvanised steel		
Luminaire casing	Steel	Epoxy-painted white RAL 9010 20% gloss	
Reflector	Aluminium		

Cooling/heating water pipe connections are Cu15/Cu10 with wall thickness of 0.9-1.0 mm fulfilling the requirements of European Standard EN 1057:1996.

The maximum operating pressure for chilled/hot water pipework is 1.0 MPa. The supply air duct connection is D 125/125 mm.

PRODUCT MODELS AND ACCESSORIES

ACCESSORY MODEL	CODE	DESCRIPTION	NOTE
Cooling coil	TC = C	Coil with chilled water circulation	Cooling copper water pipe connections are ø 15 mm
Combined cooling and heating coil	TC = H	Coil with hot and chilled water circulation	Cooling/heating copper water pipe connections are ø 15/10 mm
Cooling coil with connection in series	TC = G	Coil with chilled water circulation. Coil connected in series	Cooling copper water pipe connections are ø 15 mm
Combined cooling and heating coil with connection in series	TC = I	Coil with hot and chilled water circulation. Coil connected in series.	Cooling/heating copper water pipe connections are ø 15/10 mm
Halton Air Quality control (HAQ damper)	AQ = A	Manual operation	
	AQ = B	Motorised operation	Power supply 24 VAC Control signal 0-10 VDC
	AQ = R	Reservation for retrofitting of HAQ	In retrofitting, HAQ installation is possible
Luminaire	LV = 2C, 4C	Wattage: 28 W	Equipped with electronic ballast according to lighting control. An extra cable with or without plug is delivered upon request.
	LV = 2D, 4D	Wattage: 35 W	
	LV = 2E, 4E	Wattage: 21 W	
	LV = 2M, 4M	Wattage: 14 W	
Lighting control	LC = C1	On/Off	Luminaires equipped suitable electronic ballast for basic ON and OFF lighting control. Ensto connectors
	LC = C2	Analog 0-10V	Luminaires equipped suitable electronic ballast for analog 0-10V lighting control. Wieland 6-pole connectors
	LC = C3	DALI	Luminaires equipped suitable electronic ballast for DALI lighting control. Wieland 6-pole connectors
Emergency light fitting	EM = L1	First light on left	
	EM = L2	Second light on left	Second light only for beams longer than >2400
	EM = R1	First light on right	
	EM = R2	Second light on right	Second light only for beams longer than >2400
Control valve & actuators	CV = A1	Danfoss RA-C	Delivered factory fitted or loose. Fitted valves are located inside in front of beams for easy to access.
	CV = A3	Danfoss RA-C + TWA-H NC 24V	
	CV = A5	Danfoss RA-C + TWA-H NC 230V	
	CV = A7	Danfoss AB-QM	
	CV = A9	Danfoss AB-QM + TWA-Z 24V	
	CV = A11	Danfoss AB-QM + TWA-Z 230V	
Temperature sensors	TX = T1	Produal TEKY NTC 10	
	TX = T2	Produal TEKY NTC 20	
	TX = T3	Produal TEKY NTC 1.8	
	TX = T4	Produal TEKY NI 1000	
	TX = T5	Produal TEKY NI 1000-LG	
Carbon dioxide transmitter	Subproduct, CX	Vaisala GMW115	
Condense detector	Subproduct, WX	Condensation detector EE46	Condensation detector is installed on the inlet pipe

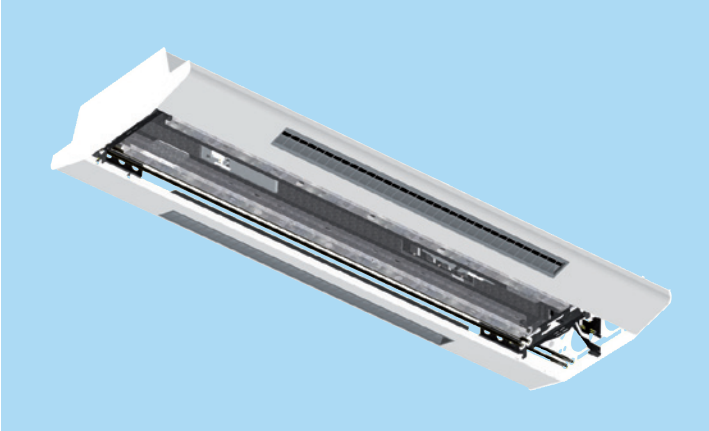

Cable tray

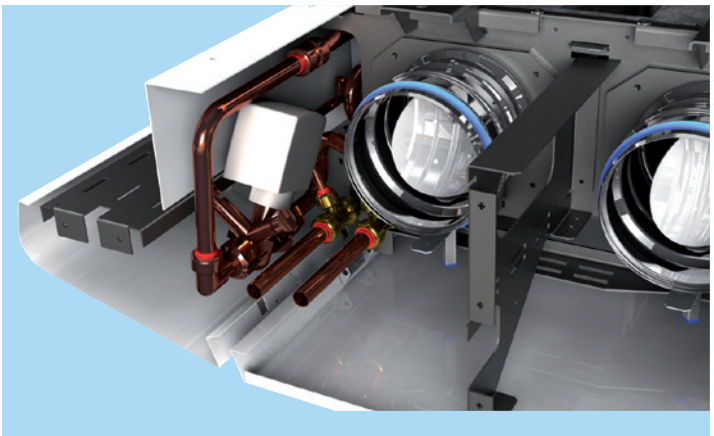

Water valves and adjustment damper

20/CBQ/1109/EN

20/CBQ/1109/EN

Function

The CBQ unit is an active chilled beam for exposed installation.

The primary supply air enters the plenum of the active chilled beam, from which it is diffused into the room through nozzles and supply slots on the top of the beam. The supply air nozzle jets efficiently induce ambient room air through the heat exchanger, where it is either cooled or heated. The supply air jet is directed horizontally along the ceiling surface. The recommended minimum distance is 600 mm from the wall and 50 mm from the ceiling.

Supply air can be additionally discharged upwards towards the ceiling via the the Halton Air Quality control unit located between the two plenum chambers.

Velocity control in the occupied zone

Halton Velocity Control (HVC) is used for adjusting room air velocity conditions either when room layout is changed (e.g., in cases where the chilled beam is located near the partition wall) or when local, individual velocity conditions need to be altered. Halton velocity control adjustment has an impact on the induced room air flow through the heat exchanger, and therefore it either increases or decreases both the velocities in the occupied zone and the cooling/heating capacity of the chilled beam.

Airflow adjustment and control

The supply air flow of the chilled beam nozzle jets is dependent on effective length, nozzle type and static chamber pressure.

Optional Halton Air Quality (HAQ) control is used for adjusting and/or controlling additional supply air flow rate in a room space. The airflow is dependent on the opening position of the control damper and the static chamber pressure.

Airflow rate control is needed when either room layout or the use of the space is changed (e.g., in a change from office to meeting room). Airflow rate can be adjusted either manually or via automatic demand-based control via a motorised control damper. The actuator can be controlled by a room controller (not included) using a 10-VDC control signal.

A chilled beam equipped with HAQ manual air flow rate adjustment can be retrofitted into motorised demand-based control simply by replacing the HAQ-unit model and connecting the power supply and control signal from a room controller to the actuator.

The chilled beams are recommended to be connected to constant pressure ductwork zone, when

- the HAQ adjustment has no impact on nozzle jet airflow
- the HAQ adjustment has no impact on either the coil cooling or heating capacities
- the HAQ airflow control has not significant impact to ductwork pressure conditions and respectively to airflow rates of other chilled beams in the same ductwork zone.

Demand-based air quality control and room air temperature control can be realised separately.

The appearance of different units - with constant, adjustable, or variable air flow - is identical.

The Halton Air Quality control unit's position and the selection of chilled beam nozzle size allow adjustment of the primary air flow rate in the space. The air flow adjustment damper (PTS) can be used for balancing air flow.

When a motorised air quality control (HAQ) unit is used, the maximum and minimum air flow rates are adjusted with the stroke limiters of the damper. Separate duct installed air flow adjustment dampers (PTS)) is not recommended for use in balancing air flow in this case.

Four different nozzle sizes are available, to enable attaining the minimum supply air flow rate of the chilled beam in a typical room module. Typically, units that are similar (in length or nozzle type) allow effective commissioning of the system.

The primary air flow rate of each beam is adjusted using the Halton Air Quality control unit during the installation and commissioning. There is no need to change or plug nozzles of the chilled beam.

Halton Air Quality control also allows increasing the air flow rate of a chilled beam - e.g., to meet the ventilation requirements of meeting rooms (up to 4 l/s per m^2, below 35 dB(A)).

Air quality and temperature control

Air quality control of a room space can be arranged, e.g., using a CO_2 sensor when room air temperature is controlled separately by regulating the water flow rate. Alternatively, a temperature sensor can be used for air quality control when air flow rate can be modulated in the first sequence and the water valve starts to open in the second sequence if the temperature exceeds the set point.

In heating mode, it is recommended that the temperature difference between the jet outlet and room air would not be greater than 3 °C. The inlet water temperature of the heat exchanger should not be higher than 35 °C. Optimal heating performance requires an appropriate primary air flow rate. Thus, the air handling unit shall be in operation during heating periods to ensure proper heating performance.

Cooling and heating capacity control

The chilled beam can be equipped in the factory with either a standard control valve or a combination control valve. Both control valves are operated by a thermal actuator applying the on/off operation principle.

The standard control valve has an adjustable kv-value. The combination control valve has an adjustable maximum limit for the water flow rate and there is a pressure difference measurement for ensuring that the pressure difference (min.: 16 kPa) is sufficient for proper operation. See Document-section for more information.

It is also possible to install the valves behind the duct cover at the building site.

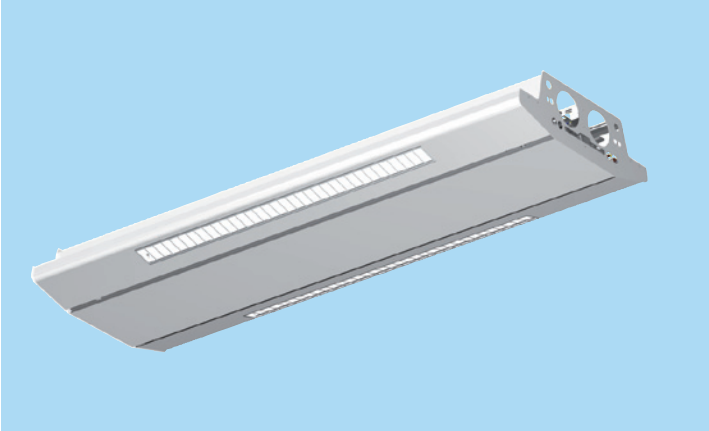

Lighting

Luminaires for CBQ chilled beams are especially designed high specification recessed direct/indirect luminaires for office applications. The luminaire is designed to suit chilled beam aperture, providing direct/indirect lighting to help meet the Office Lighting Guide LG7 (UK) requirements. Lights are installed and tested in the factory. An extra cable with or without plug is delivered upon request. Standard plug types are Schuko, Enstonet and Wieland.

Lights are manufactured from steel, power coated to match the required finish. Xenoptic satin louver is retained by shootbolt spring fixings. All luminaires come complete with T5 triphosphor lamps with the option of high output or high efficiency.

High frequency control gear DSI, DALI or 1…10 volt dimmable gears are available.

As an option there is also available self-contained emergency lights or central battery/static inverter conversions available, with or without self test system.

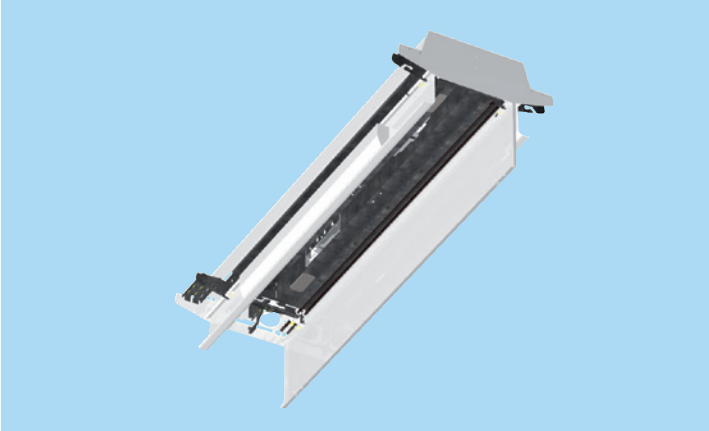

Installation

The CBQ unit is suitable for exposed installation in the ceiling, typically lengthwise in the room. It is recommended to position the beam no closer than 600 mm from the wall (1050 mm between wall and unit centreline) and 100 mm from the ceiling. The chilled beam ceiling brackets can be fixed directly to the ceiling surface or suspended using threaded drop rods (8 mm).

Install the main pipelines of the cooling and heating water loops above the level of the chilled beams to enable venting of the pipework.

Connection of motorised air quality (HAQ) control:

Power supply: 24 VAC.
Control signal: 0 ... 10 VDC.

Luminaires

The luminaires within a single chilled beam are interconnected in the factory as standard. The power supply is connected using a plug connector located at the connection end of the beam. An extra cable with or without plug is delivered upon request. Standard plug types are Schuko, Enstonet and Wieland

Luminaire type	14	21	28	35
Luminaire length	569	869	1169	1469
Beam nominal length mm				
One-piece				
1200	2	-	-	-
1300	2	-	-	-
1400	2	-	-	-
1500	-	2	-	-
1600	-	2	-	-
1700	-	2	-	-
1800	-	-	2	-
1900	-	-	2	-
2000	-	-	2	-
2100	-	-	-	2
2200	-	-	-	2
2300	-	-	-	2
2400	-	-	-	2
Two-piece				
2500	4	-	-	-
2600	4	-	-	-
2700	4	-	-	-
2800	4	-	-	-
2900	-	4	-	-
3000	-	4	-	-
3100	-	4	-	-
3200	-	4	-	-
3300	-	4	-	-
3400	-	4	-	-
3500	-	-	4	-
3600	-	-	4	-
3700	-	-	4	-
3800	-	-	4	-
3900	-	-	4	-
4000	-	-	-	4

Adjustment

Cooling

The recommended cooling water mass flow rate is 0.02...0.10 kg/s, resulting in a temperature rise of 1...4 °C in the heat exchanger. To avoid condensation, the recommended inlet water temperature of the heat exchanger is 14...16 °C.

Heating

The recommended heating water mass flow rate is 0.01...0.04 kg/s, resulting in a temperature drop of 5-15 °C in the heat exchanger.
The recommended temperature of the inlet water for the heat exchanger is 35 … 45 °C.

Balancing and control of water flow rates

Balance the water flow rates of the chilled beam with adjustment valves installed on the outlet side of the cooling and heating water loops. The cooling capacity and heating capacity of the chilled beam are controlled by regulating the water mass flow rate. The water mass flow rate can be controlled by using an ON/OFF valve or a two- or three-way proportional valve.

Adjustment of supply air flow rate

Each chilled beam is equipped with a measurement taps (2 pcs) for static pressure measurement, which enables fast and accurate measurement of the supply airflow rate through the effective part of the chilled beam. The airflow rate is calculated using the formula below.

Nozzle jet airflow rate qv1

$$q_v = k * l_{eff} * \sqrt{\Delta p_m}$$

leff length of the coil, m
dpm average of the measured static pressure of the two chambers. , Pa

Nozzle	k (l/s)	k (m³/h)
A	0,72	2,59
B	0,98	3,53
C	1,34	4,82
D	1,94	6,98

The supply air flow rate of the Halton Air Quality control unit is determined by measuring chilled beam static pressure and reading the opening position of the HAQ unit. The air flow rate is calculated using the formula below.

Air quality control diffuser airflow rate qv2

$$q_v = a / k * \sqrt{\Delta p_m}$$

a HAQ position
dpm measured static chamber pressure, Pa

k (l/s)	k (m³/h)
2,5	0,69

Total airflow rate qv

qv = qv1 + qv2

Adjustment of the air flow in constant airflow applications

Define the position of HAQ in millimeters that correspond to airflow rate at the actual chamber pressure level.

Adjustment of HAQ is done manually with the help of position scale by adjusting the opening of the unit. It is possible to verify the opening in millimeters on the position scale.

In order to ensure accurate adjustment it is recommended to adjust HAQ-position and in the same time read the targeted chamber pressure using the manometer.

It is also possible to remove the HAQ-unit from the frame by opening two knurled-head screws (4) for the adjustment.

Adjustment of the air flow range in variable-air-flow applications

1. Release of the actuator
2. Restriction of the max. opening
3. Restriction of the min. opening

Switch-off the power supply of the actuator.

Disengage the actuator gear into manual override position by releasing the knob.

Define the maximum and minimum positions, in millimeters that correspond to maximum and minimum air flow rates at the actual chamber pressure level.
The maximum and minimum positions are adjusted with two screws (2,3). It is possible to verify the opening in millimeters on the position scale.

Switch on the power supply (24 VAC) of the actuator. The actuator calibrates the min. and max. positions automatically according to the set limits.

The actuator can be controlled from this point on by using a 0...10 VDC control signal. (0 VDC=min.position, 10 VDC = max. position)

It is also possible to remove the HAQ-unit from the frame by opening two knurled-head screws (4) for the adjustment.

Adjustment of Halton Velocity Control

The Halton Velocity Control unit is adjusted by manually turning the sections of the unit.
The HVC units have three different positions: 1 = throttle position, 2 = normal position, and 3 = boost position.

Suggested specifications

The multiservice beam is an active chilled beam for exposed installation with bi-directional air supply. The front panel shall be openable and detachable from either side without the use of any special tools.

The chilled beam shall have a infill extension to cover the connection duct and pipe installations between wall and beam and also between two beams (optional).

The chilled beam shall have an air flow adjustment damper.

The front panel and side panels shall be made of pre-painted galvanised steel plate.
All visible parts shall be white RAL 9010, 20% gloss.

The primary air flow rate shall be adjustable over a wide range via a separate supply air unit of the chilled beam. Adjustment of the air flow rate shall not have any effect on induced air flow rate through the coil.
The induced room air flow rate shall be manually adjustable to three positions without influencing the primary air supply flow rate.

Supply air flow rate shall be manually adjustable using an airflow damper, or equipped with an actuator for demand-based control of air flow (optional).
Control of supply air flow rate shall not have any effect on coil cooling and heating capacities.
The adjustable-air-flow-rate beam shall have only one duct connection.
The appearance of the chilled beams with constant air flow and adjustable air flow rate shall be the same.

The active chilled beam shall be equipped with 0 - 2 recessed integrated flush mounted luminaires with (option: dimmable) electronic ballasts. Luminaires shall be of T5 type (high efficiency) and equipped with reflectors suitable for the office environment. Same lights shall be used as indirect and direct lighting.

The chilled beam shall be equipped with a cable tray.

All pipes shall be manufactured from copper, connection pipes with a wall thickness of 0.9-1.0 mm. The cooling heat exchanger shall consist of six 15-mm pipes connected in series. The fins of the heat exchanger shall be manufactured from aluminium. Heating shall be incorporated within the heat exchanger via two 10-mm pipes connected in series. All joints shall be factory pressure-tested.

The maximum operating pressure of pipework shall be 1.0 MPa.
Each active chilled beam shall be protected by a removable plastic coating and individually packed in a plastic bag. Duct connection and pipe ends shall be sealed for transit.
Each chilled beam shall be identifiable by a serial number printed on a label attached to the active chilled beam.

Product code

CBQ/S-E-L-C

S = Direction of supply patterns & nozzle type

A	Bi-directional / Nozzle 1
B	Bi-directional / Nozzle 2
C	Bi-directional / Nozzle 3
D	Bi-directional / Nozzle 4

E = Duct connection/Duct size/Damper

S2N	Straight / 125 /Without damper
S2D	Straight / 125 /With damper
F2N	1. module / 125/Without damper
F2D	1. module / 125 /With damper
T2N	Conn. both ends / 125 / Without damper
T2D	Conn. both ends / 125 / With damper
E2N	End module/125/ Without damper
E2D	End module/125/ With damper

L = Total length

1200,+100,..,4000

C = Effective length (Cooling coil length)

800,+100,..,3600

Specifics and accessories

TC = Cooling / Heating functions (Coil type)

C	Cooling
H	Cooling and Heating
G	Cooling with connection in series
I	Cooling and Heating with connection in series

CO = Colour

W	White
X	Special colour

AQ = Air quality control

A	Manual
B	Motorised
R	Retrofit possibility

LV = Type of direct light fitting

N	Without light
2C	2 x light 28 W Halton
2D	2 x light 35 W Halton
2E	2 x light 21 W Halton
2M	2 x light 14 W Halton
4C	4 x light 28 W Halton
4D	4 x light 35 W Halton
4E	4 x light 21 W Halton
4M	4 x light 14 W Halton

LC = Lighting control

C1	On/Off
C2	0…10V, dimmable
C3	DALI, dimmable

EM = Emergency light fitting

N	No
L1	Left first
L2	Left second
R1	Right first
R2	Right second

CV = Control valves & actuators

N	No
A1	Adjust. kv value, factory mounted, no actuator
A3	Adjust. kv value, factory mounted, 24V act.
A5	Adjust. kv value, factory mounted, 240V act.
A7	Constant-flow-mounted
A9	Constant-flow-mounted, 24V act.
A11	Constant-flow-mounted, 230-V act.

TX = Temperature sensor

N	No
T1	NTC 10k
T2	NTC 20k
T3	NTC 1,8k
T4	Ni 1000
T5	Ni 1000LG

AC = Accessories

OX	Multisensor for lighting control
CX	CO2 sensor (0…10V)
WX	Condense detector (1V free relay contact)
LS	Speaker

Sub-products

DCB	Duct cover

Code example

CBQ/A-S2N-2000-1600 TC=C,CO=W,AQ=R,LV=2M, LC=C1,EM=N,CV=N,TX=N